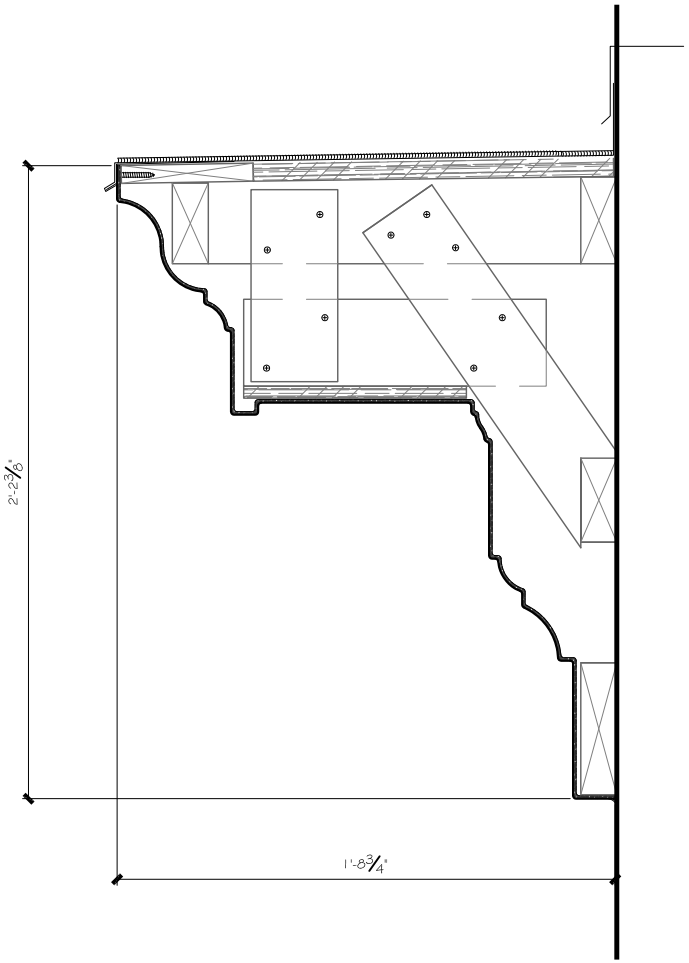

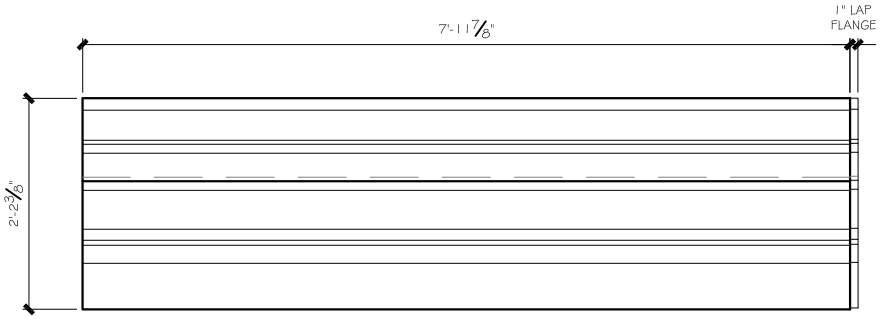

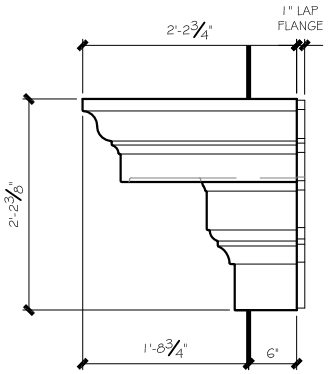

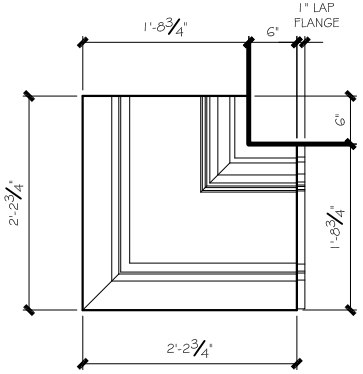

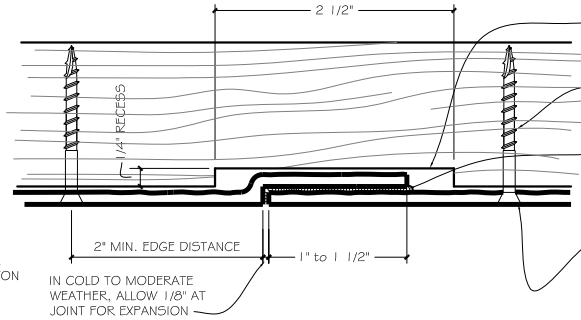

ATTACHMENT FRAMING TO BE RECESSED OR NOTCHED @ LAP JOINTS (TYP.)

#7 COUNTERSUNK STAINLESS STEEL TRIM HEAD SCREWS (AVAILABLE THROUGH EDON)

APPLY ADHESIVE / SEALANT, COLOR MATCHED OR PAINTABLE IF DESIRED, TO LAP JOINT PRIOR TO INSTALLATION (SEALANTS SUPPLIED BY INSTALLER)

USE COLOR COATED SCREWS AS SUPPLIED BY MELTON. IF CONSEALED SCREWS ARE DESIRED, INSTALLER TO APPLY A SKIM COAT OF COLORED CAULK TO EACH SCREW HEAD (TYP.)

NOTE:
CORNICE IS INTENDED TO BE INSTALLED USING ONLY THE APPROPRIATE COUNTERSINKING TOOL AND SCREW SYSTEM AS PROVIDED IN THE MELTON SAMPLE PACK. ALL BLOCKING, FASTENERS AND SEALANTS TO BE PROVIDED BY INSTALLER

MC-40	Melton Classics Incorporated
SUBJECT	MC-40 CORNICE DETAILS
PROJECT	STANDARD CORNICES
CONTRACTOR	MELTON CLASSICS INCORPORATED
DRAWN BY: JCH	DATE: 1/5/09